AVANT Programmable head basic setup guidelines

Hole location names for the mixing arms

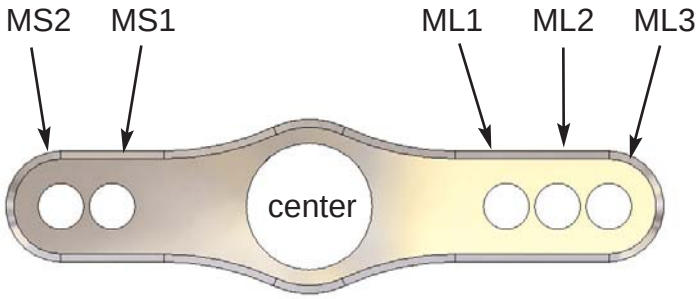

For the rod coming from the swashplate (left) using holes closer to the center make the head more active and away from center make the head more stable.

For the rod from the flybar (right) using holes closer to the center make the head less active or more stable and away from center more active or less stable.

Note: When using the longer side on the swashplate rod rotate the mixing arm so that the longer side is on the left.

Hole location names for the flybar carrier

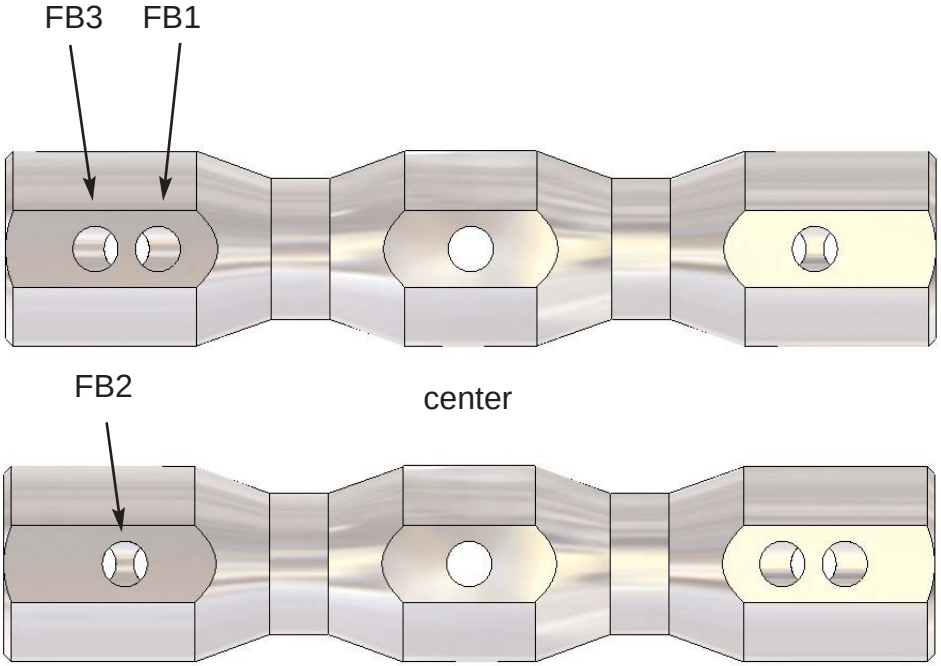

On the flybar carrier holes closer to the center pivot are more active and away from the center are more stable.

Hole location names for the blade grip

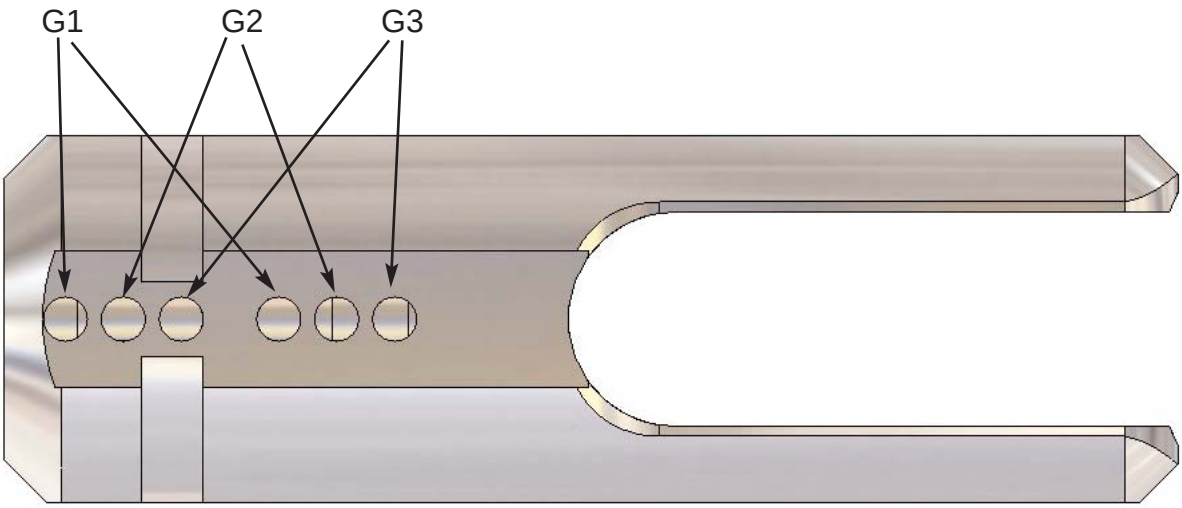

Hole location names for the pitch arms

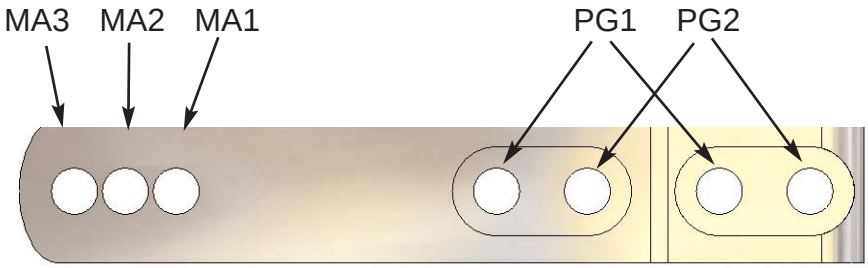

Holes on the bladegrip and pitch arm affect the delta.
Lower delta numbers are more active. Higher delta numbers are more stable. For all the delta settings please see diagram for delta settings in the manual.

Default basic head settings

Setting	Mixing arm Swash rod	Mixing arm Flybar rod	Flybar	Bladegrip	Pitch Arm Grip side	Pitch Arm MX arm hole	Resulting Delta
Ultra stable	ML3	MS1	FB3	G2	PG1	MA1	16
Stable	ML3	MS2	FB3	G3	PG1	MA3	14
Normal	MS2	ML2	FB2	G3	PG2	MA2	11
Active	MS2	ML2	FB2 or FB1	G3	PG2	MA3	7
Super Active	MS1	ML3	FB1	G2	PG2	MA3	3

Important note:
When using Active and Super Active settings the forces applied to the CCPM servos are larger than normal so plastic servo gears can suffer or break. Metal geared high torque servos are strongly recommended for those settings.

For pilots that want more precise adjustment of the delta settigns here's a guide on how to use the hole locations to vary the setting in small increments. A good starting point for the delta setting is position 7. (4 is Zero delta). # 7 position is achieved using holes number G3 on the bladegrip and holes number PG2 and MA3 (letter A on the drawing below) on the bladegrip pitch arm. Lower numbers make the cyclics more responsive. Higher numbers make them less responsive. (The pink dot indicates the location of the bolts)

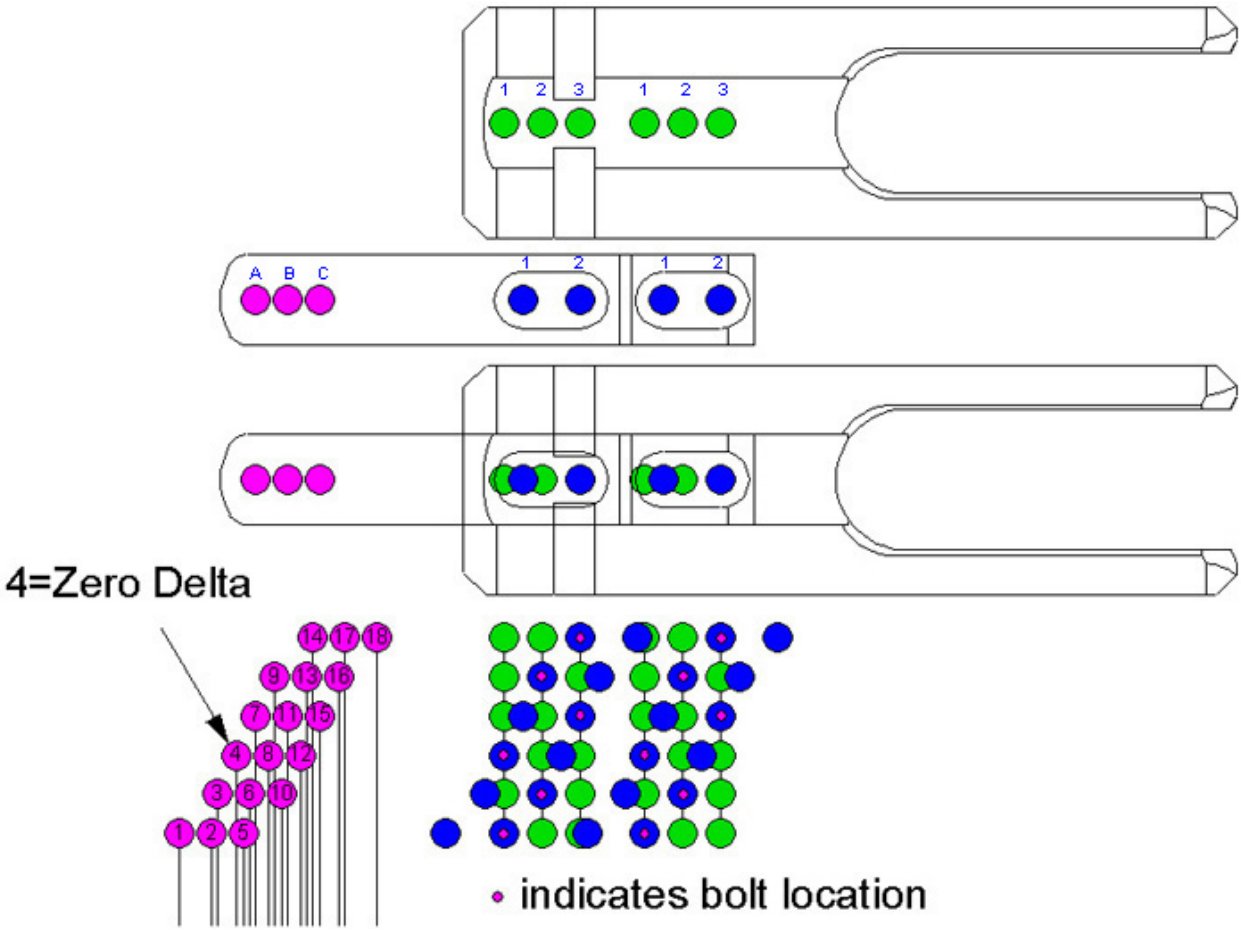

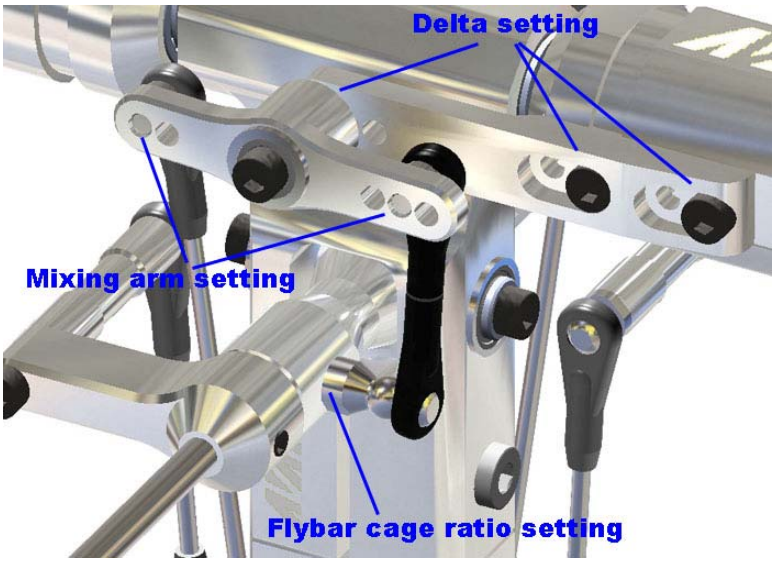

Adjust the phasing to match your blades lead-lag angle and eliminate tail corkscrewing during rolls. If you need to correct you can start with about 1 degree and build up from there.